八欧無線製〔ゼネラル6A–3型〕6球スーパー　6D6–6WC5–6D6–6ZDH3–42–80–6E5
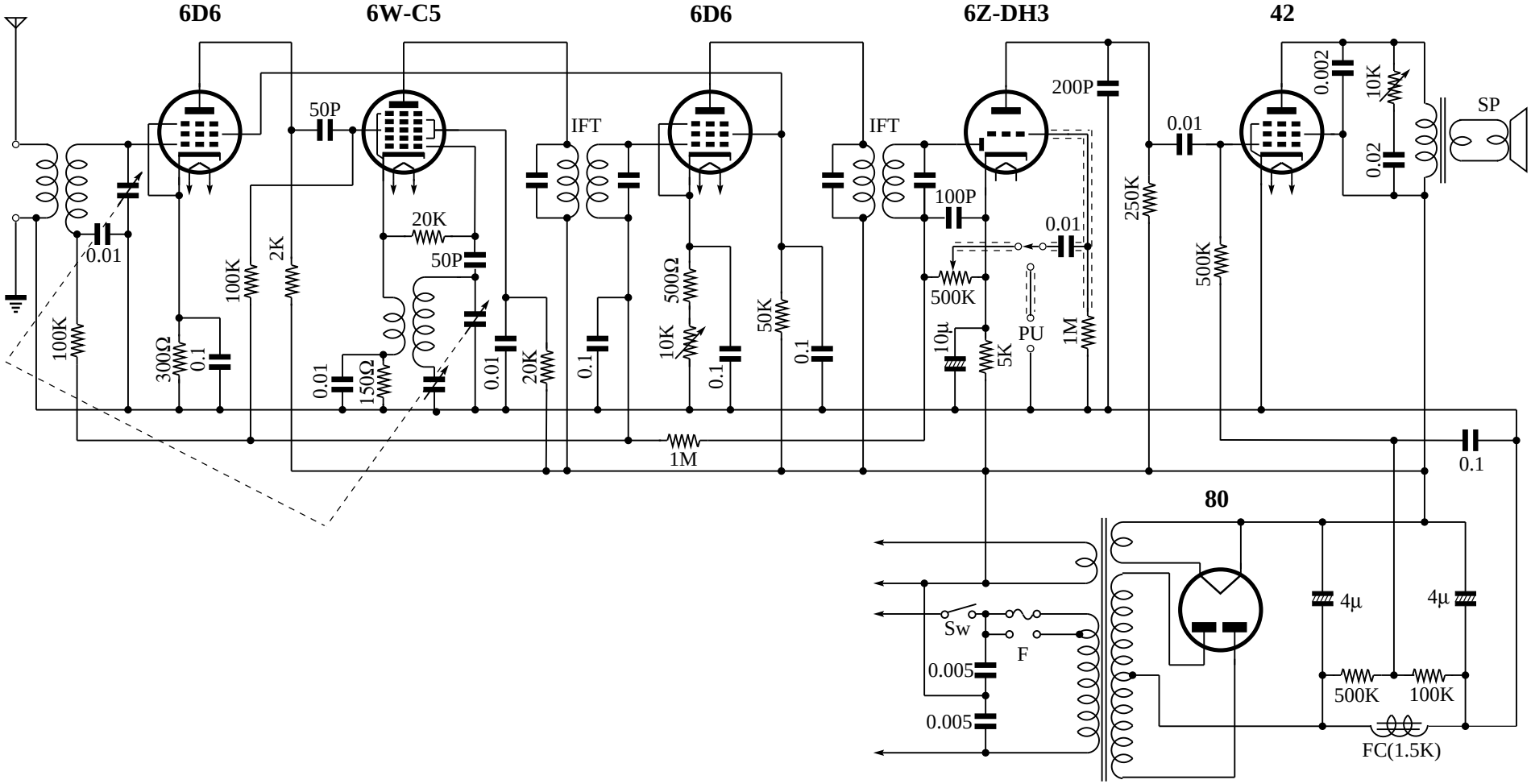
(新ラジオ百回路集)